Tel. +49 511 473 530 91
Fax +49 511 473 530 88

GS-M2M accessories GmbH, Albert-Einstein-Straße 13, 30926 Seelze E-Mail gs@gs-m2m.de

GS-ANT-33-200

GS-ANT-33-200-SMA

Technical Data		
Patch/glass mount antenna		
GSM / WiFi antenna		
	Frequency Range	AMPS 824 - 894 MHz ISM 868 MHz GSM 900 MHz DCS 1800 MHz PCS 1900 MHz UMTS 2100 MHz WiFi / Bluetooth 2400 MHz
	VSWR*	< 2:1
	Gain	0 dB
	Power Max.	25 W
	Impedance	50 Ω
	Polarization	Linear
Mechanical Data		
	Dimensions (H x L x W)	ca. 7 mm x 116 mm x 22 mm
	Cable	ca. 2.5 m, RG174
	Connector (variants)	**GS-ANT-33-200** FME (f)
		…33-200-SMA SMA (m)

Tel. +49 511 473 530 91
Fax +49 511 473 530 88

GS-M2M accessories GmbH, Albert-Einstein-Straße 13, 30926 Seelze E-Mail gs@gs-m2m.de

GS-ANT-33-200

GS-ANT-33-200-SMA

	Operating temperature range	-40°C .. +85°C
	Weight	55 g (without cable)
	Material	ABS
	Adhesive mount	
	RoHS compliant	

Drawing:

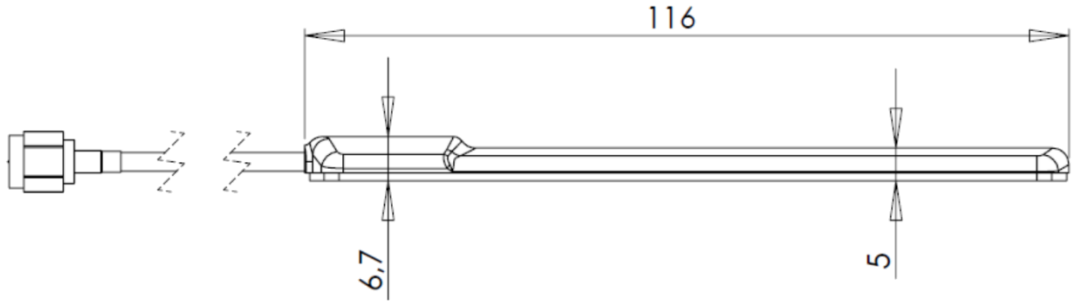

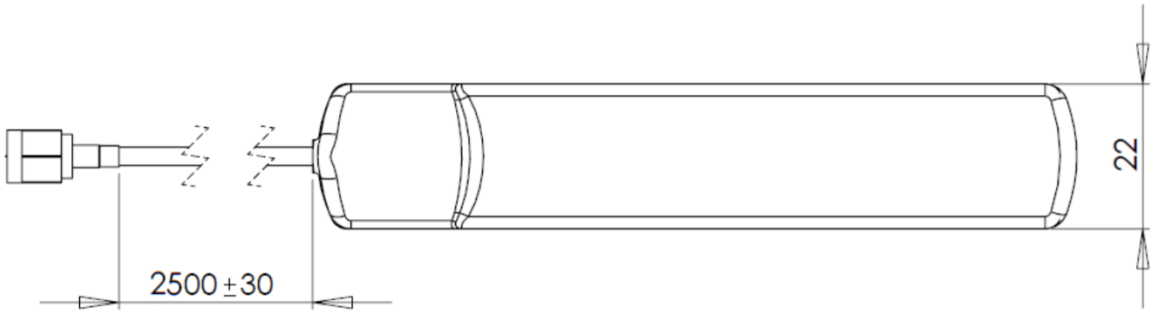

Tel. +49 511 473 530 91
Fax +49 511 473 530 88

GS-M2M accessories GmbH, Albert-Einstein-Straße 13, 30926 Seelze E-Mail gs@gs-m2m.de

GS-ANT-33-200

GS-ANT-33-200-SMA

Electrical characteristics:

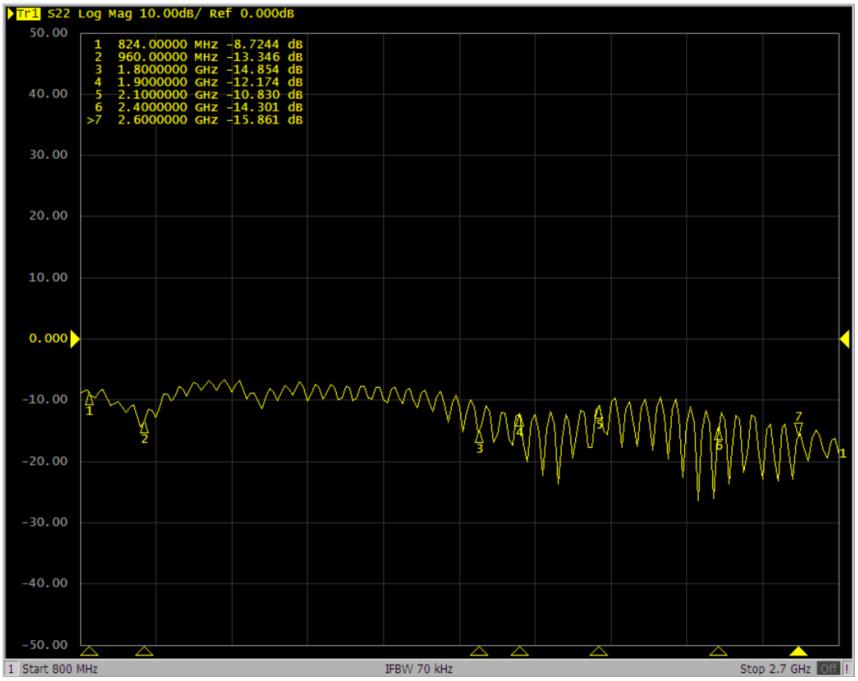

Log Mag

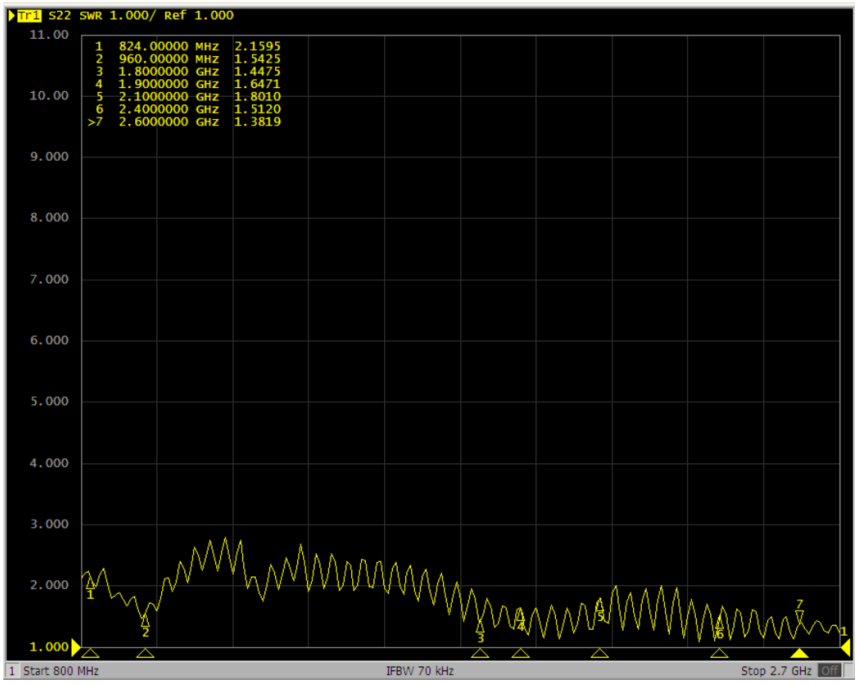

VSWR

Tested with 2.5m cable, antenna placed on glass